Midmark® 800 Digital Vital Signs Device: Installation Guide for Wall Mount with Adapter

Applies to Models:
1-300-0100 thru 1-300-0400

Special Tools:
none

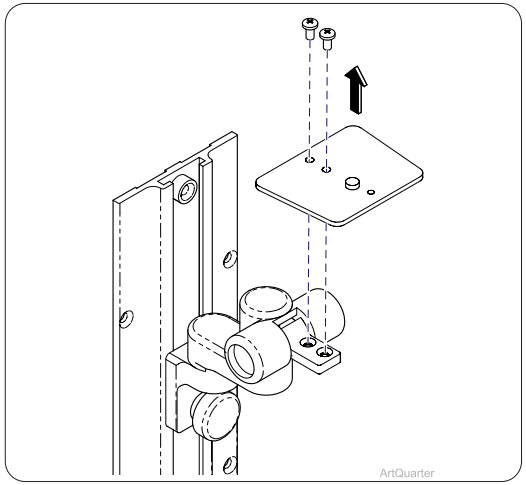

Step 1:
Remove two Phillips screws and top aluminum plate from existing mount.

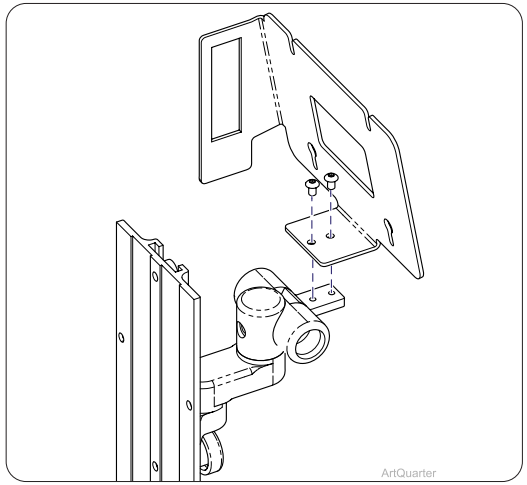

Step 2:
Install new bracket using two button head hex #10-32 x 5/16 in screws.

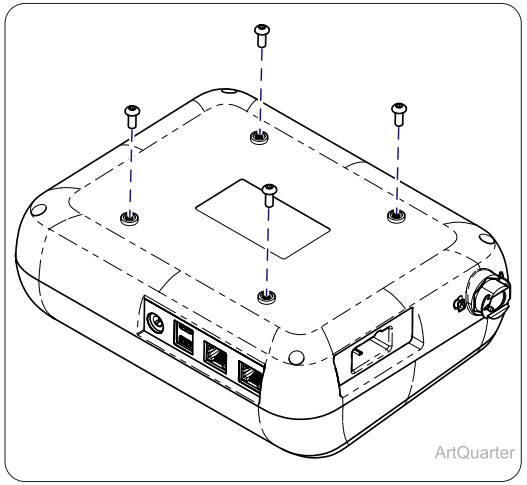

Step 3:
Start four M4x10mm button head hex screws into the back of the Midmark 800.

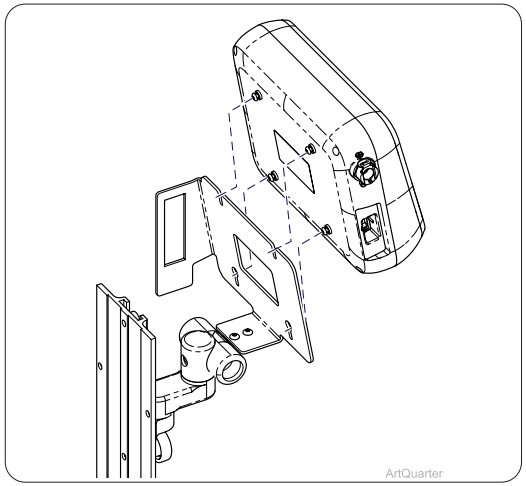

Step 4:
Slide the Midmark 800 into the slots of the bracket. Then tighten down the four screws.

Note
Maximum load on the device mount: 2.95 kg (6.5 lb)
Maximum load in the basket (not pictured): 1.6 kg (3.5 lb)

© 2026 Midmark Corp. | 60 Vista Drive Versailles, OH 45380 USA | 1.800.643.6275 | midmark.com

Style A

003-10955-00 Rev AA2 (04/10/26)
20-42-FO-00012 Rev A3 ECO101412