Midmark® 800 Digital Vital Signs Device: Installation Guide for Equipment Pole with Adapter

(Kit #002-11419-00)

Applies to Models:
1-300-0100 thru 1-300-0400

Special Tools:
none

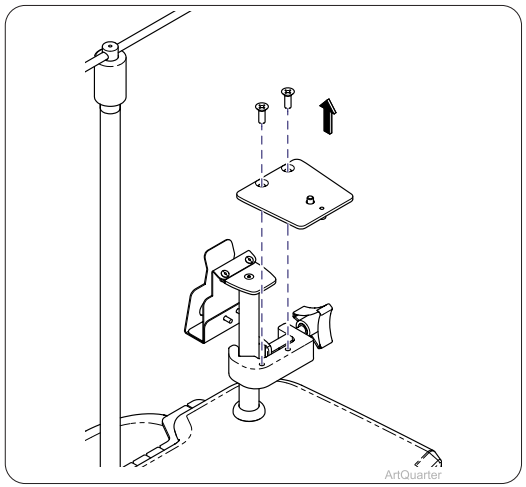

Step 1:

Remove two Phillips screws and top black plate from existing equipment pole.

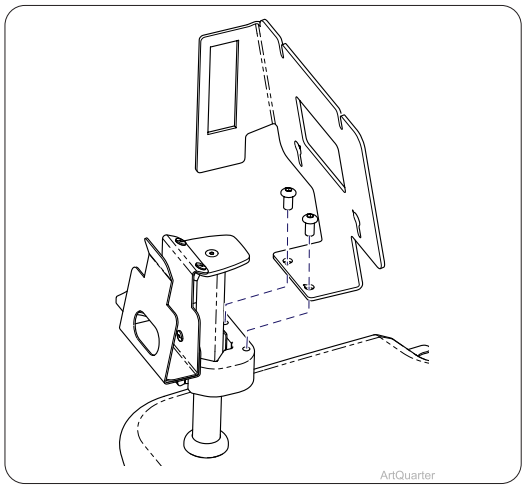

Step 2:

Install new bracket using two button head hex 1/4-20 x 1/2 screws.

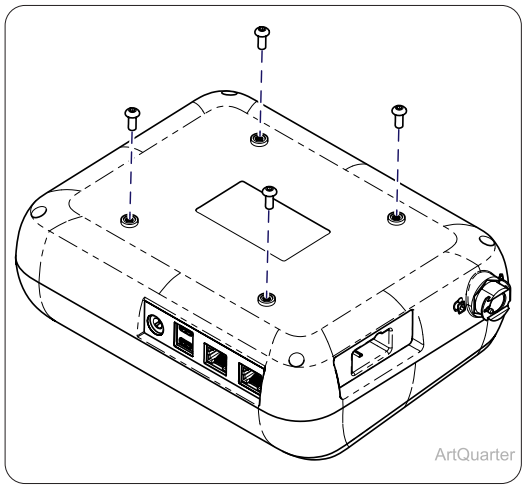

Step 3:

Start four M4 × 10 mm button head hex screws into the back of the Midmark 800.

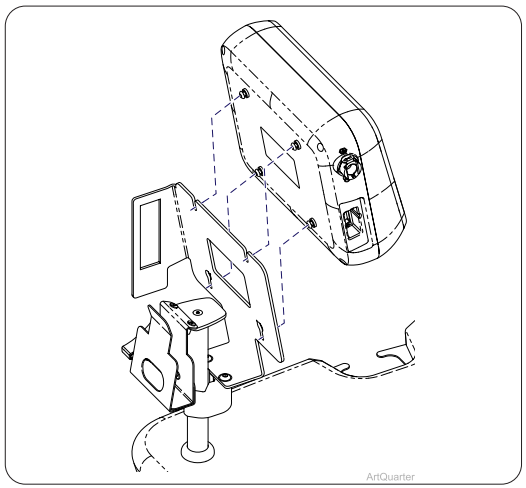

Step 4:

Slide the Midmark 800 into the slots of the bracket. Then tighten down the four screws.

Note

Mass of cart: 34 kg (75 lb)

Maximum load: 9 kg (20 lb)

© 2026 Midmark Corp. | 60 Vista Drive Versailles, OH 45380 USA | 1.800.643.6275 | midmark.com

Style A

003-10956-00 Rev AA3 (10/13/26)
20-42-FO-00012 Rev A3 ECO101412

Midmark® 800 Digital Vital Signs Device: Installation Guide for Equipment Pole with Adapter

(Kit #002-11619-00)

Applies to Models:
1-300-0100 thru 1-300-0400

Special Tools:
none

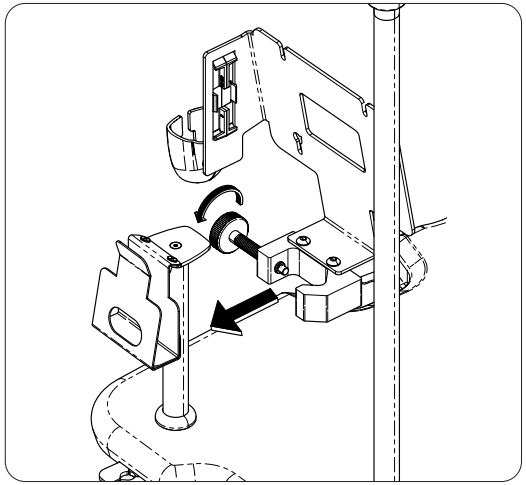

Step 1:
Position clamp around equipment pole and tighten thumbscrew until secure.

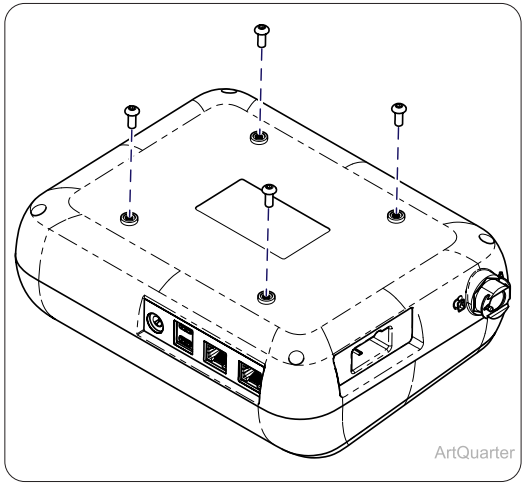

Step 2:
Start four M4 × 10 mm button head hex screws into the back of the Midmark 800.

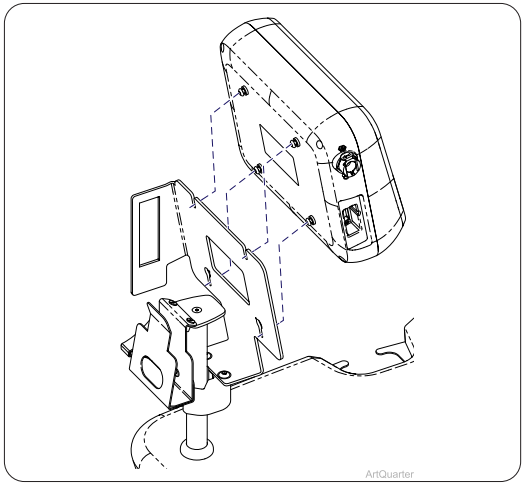

Step 3:
Slide the Midmark 800 into the slots of the bracket. Then tighten down the four screws.

Note
Mass of cart: 34 kg (75 lb)
Maximum load: 9 kg (20 lb)

© 2026 Midmark Corp. | 60 Vista Drive Versailles, OH 45380 USA | 1.800.643.6275 | midmark.com

003-10956-00
20-42-FO-00012 Rev A3 ECO101412