Midmark® 800 Digital Vital Signs Device: Installation Guide for Wire Basket Cart with Adapter

Applies to Models:
1-300-0100 thru 1-300-0400

Special Tools:
none

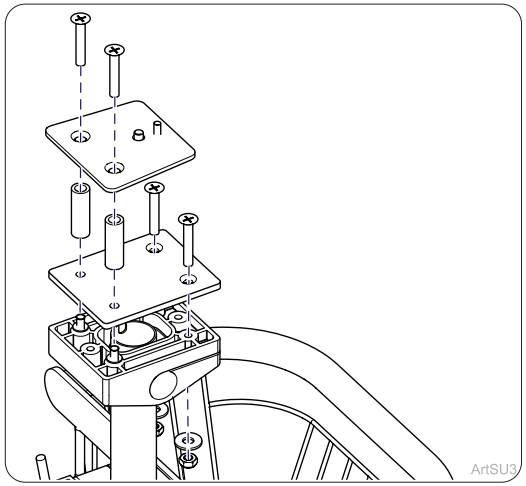

Step 1:

Remove four Phillips screws, two nyloc nut/washer sets, the black plate and white plate from existing cart. Save the washers as they will be reused later.

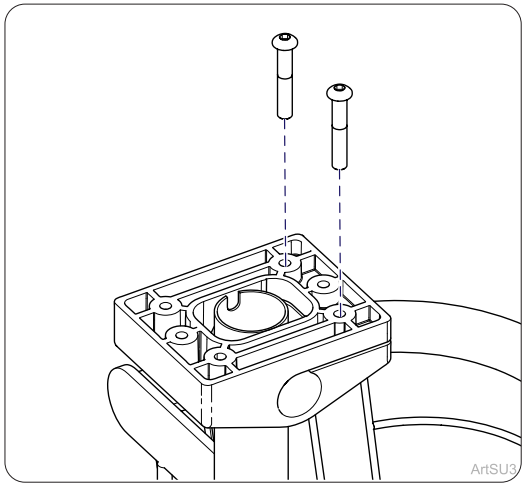

Step 2:

Start two 1/4-20 x 1 1/2 in. hex socket button head screws into the front two holes of the mount.

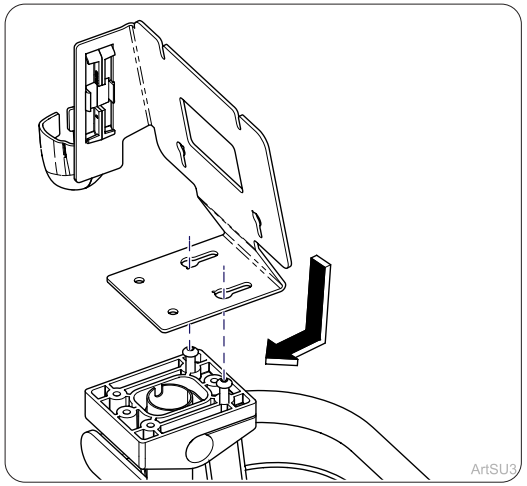

Step 3:

Place bracket over the front two screws and slide back.

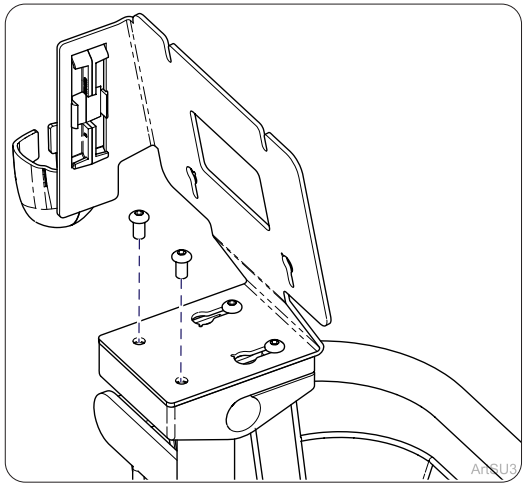

Step 4:

Tighten down front two screws and install two rear screws (button head hex 1/4-20 x 1/2 in.).

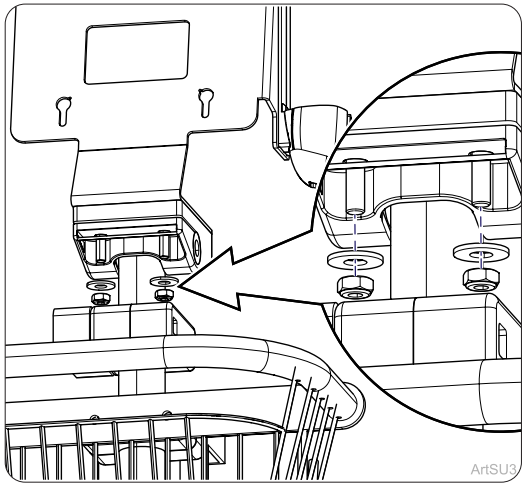

Step 5:

Re-install washers and install new 1/4-20 nyloc nuts to bottom of black clamp. (This is what adjusts clamp tension.)

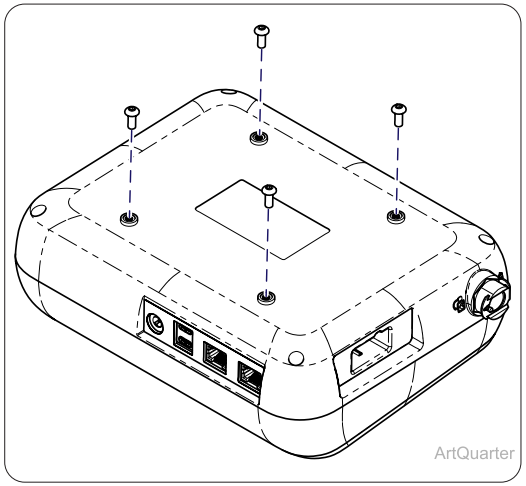

Step 6:

Start four M4x10mm button head hex screws into the back of the Midmark 800.

© 2026 Midmark Corp. | 60 Vista Drive Versailles, OH 45380 USA | 1.800.643.6275 | midmark.com

Style A

003-10957-00 Rev AA2 (04/13/26)
20-42-FO-00012 Rev A3 ECO101412

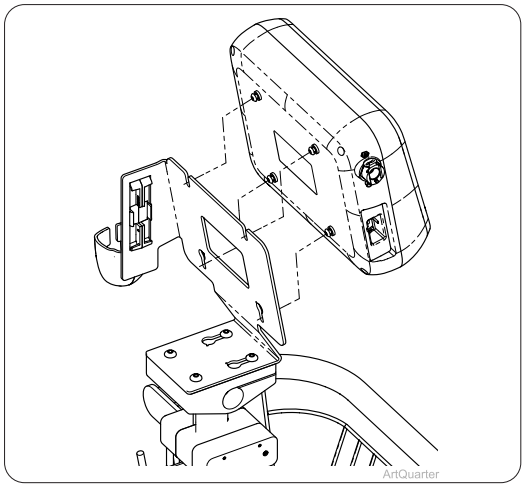

Step 7:

Slide the Midmark 800 into the slots of the bracket. Then tighten down the four screws.

Note

Mass of cart: 17.2 kg (38 lb)

Maximum basket load: 1.6 kg (3.5 lb)

© 2026 Midmark Corp. | 60 Vista Drive Versailles, OH 45380 USA | 1.800.643.6275 | midmark.com

003-10957-00
20-42-FO-00012 Rev A3 ECO101412