Midmark® 800 Digital Vital Signs Device: Cart Setup

Applies to Models:
1-300-0100 thru 1-300-0400

Special Tools:
None

Before assembly, confirm the following parts are present:

- Package A
  1. Base with five locking casters (x1)
  2. Cart handle (x1)
  3. Device mounting bracket (x1)
  4. Rear bin with mounting plate and hardware attached (x1)
  5. Front bin (x1)
  6. M6 bolts (x8)
  7. M4 thread-forming screws (x2)
  8. Hook and loop fastener straps (x3)
- Package B
  1. Column (x1)
  2. Short cable protection sleeves (x2)
  3. Long cable protection sleeve (x1)
- Package C (optional; select orders only)
  1. Scale holder (x1)
  2. Mounting plates (x2)
  3. M4 x 12 mm Phillips flat head screws (x4)

Package A

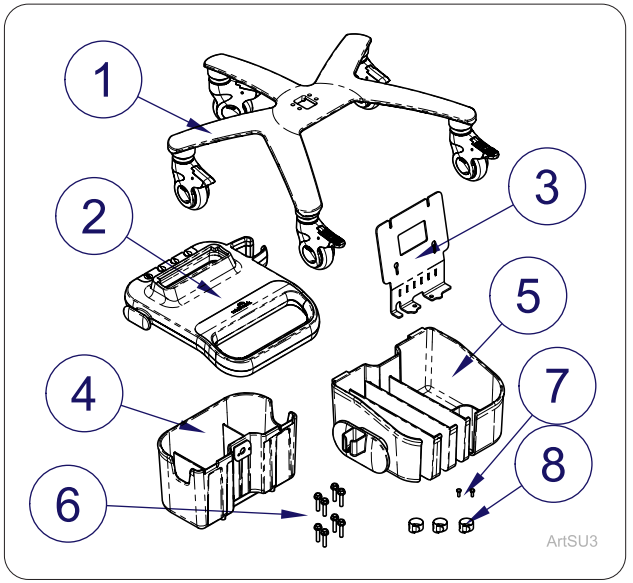

Package B

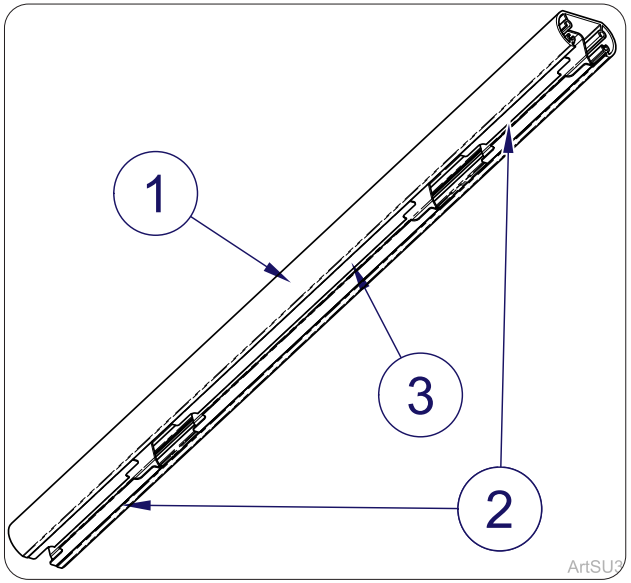

Package C

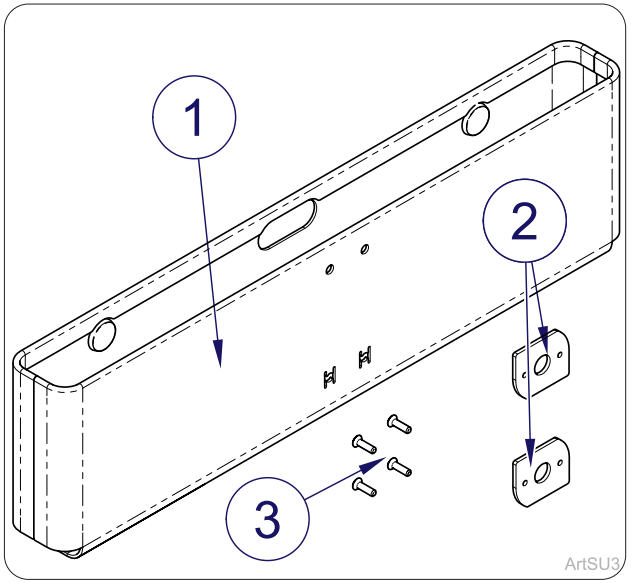

Note

- **Mass of cart: 12.25 kg (27 lb)**
- **Safe working load for device mount: 2.95 kg (6.5 lb)**
- **Safe working load for bins (total): 1.6 kg (3.5 lb)**

© 2026 Midmark Corp. | 60 Vista Drive Versailles, OH 45380 USA | 1.800.643.6275 | midmark.com

Style A

9260181 Rev A / **003-11042-00** Rev AA2 (06/22/26)
20-42-FO-00012 Rev A3 ECO101412

Setup (Scale Holder. If not using a scale holder, skip ahead to Step 5.)

Step 1: Slide the short cable protection sleeve out from one end of the column.

This end will now be the bottom of the column. Set aside removed sleeve as a spare part.

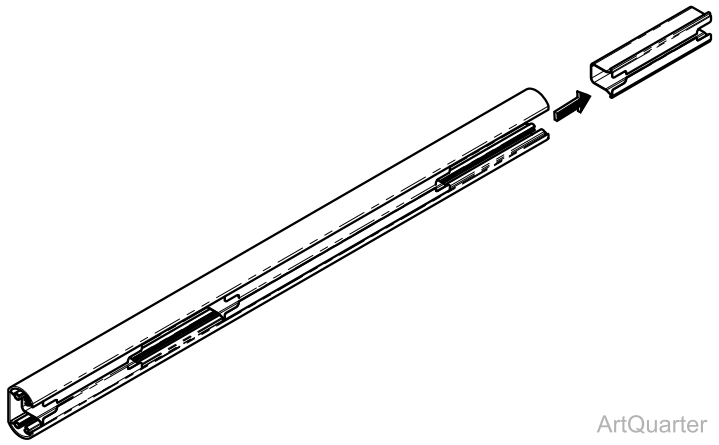

ArtQuarter

Step 2: Start mounting plates to scale holder.

Do not fully tighten.

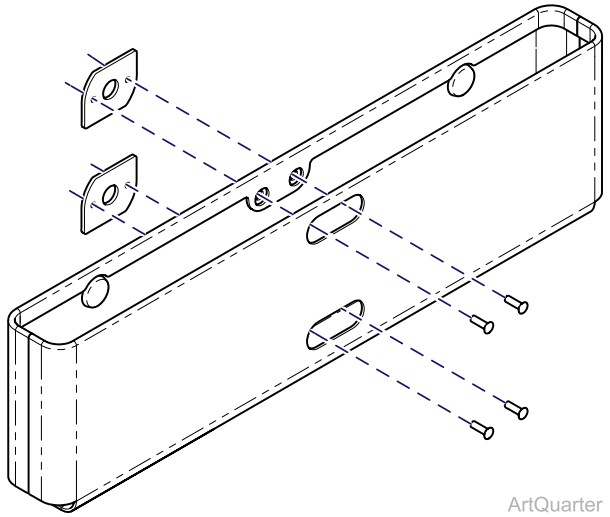

ArtQuarter

Step 3: Slot scale holder into bottom of column.

This is the end from which the cable protection sleeve was removed in Step 1. The mounting plates on the back of the scale holder should slide into the grooves in the column as shown. (Image depicts the column/scale holder as viewed from below.)

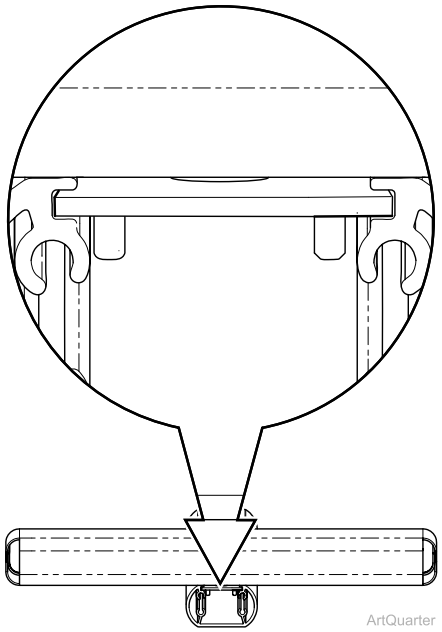

ArtQuarter

Step 4: Position scale holder approximately 2 inches from bottom of column.

Tighten all four screws in the mounting plates to secure the scale holder in place.

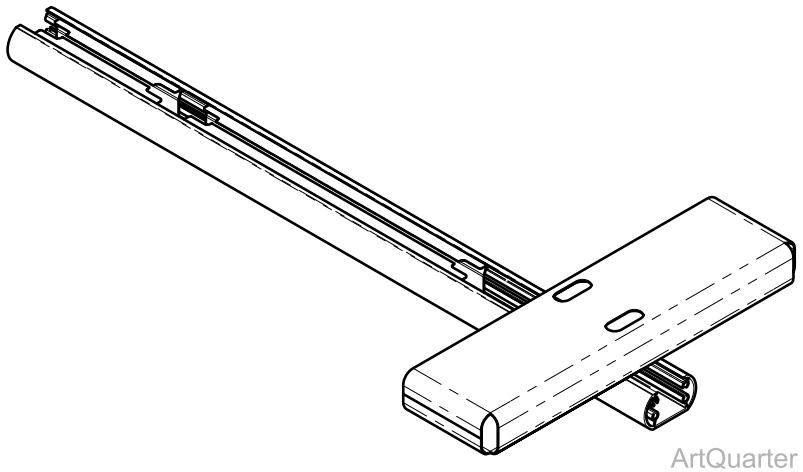

ArtQuarter

© 2026 Midmark Corp. | 60 Vista Drive Versailles, OH 45380 USA | 1.800.643.6275 | midmark.com

9260181 / **003-11042-00**
20-42-FO-00012 Rev A3 ECO101412

Setup

Step 5: Attach base to bottom of column.

A) Flip column so that bottom is accessible.

B) Align column and base such that the open face of the column faces the side of the base with three casters.

C) Use four of the M6 bolts to attach base to column.

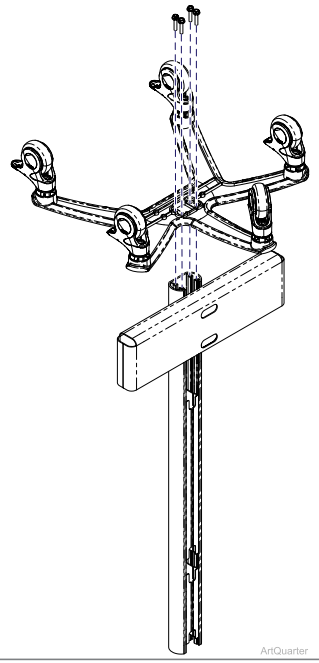

Step 6: Prepare column for bin attachment.

A) Flip cart right-side up.

B) Slide up and remove the short, top cable protection sleeve. Set aside; it will be replaced later.

C) Bottom out the middle, long cable protection sleeve on top of the scale holder mounting plate (or the the bottom cable protection sleeve if scale holder was not used).

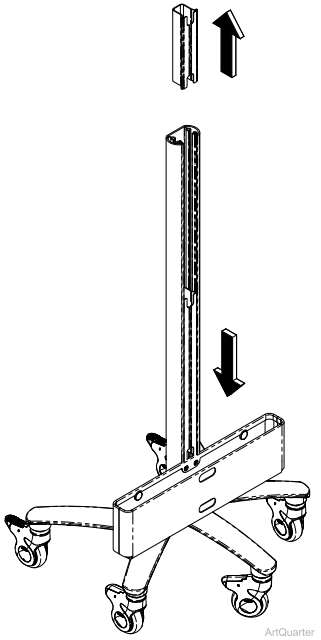

Step 7: On the bottom of the rear bin, loosen all four screws of the power suppply holder.

Do not fully remove, just loosen.

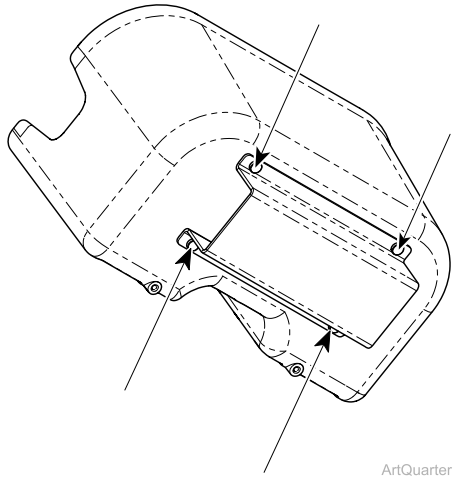

Step 8: Attach rear bin to cart.

A) Slot rear bin into column via mounting plate (item 1).

B) Bottom out rear bin mounting plate on top of the longer, middle cable protection sleeve.

C) Tighten both mounting plate screws (item 2).

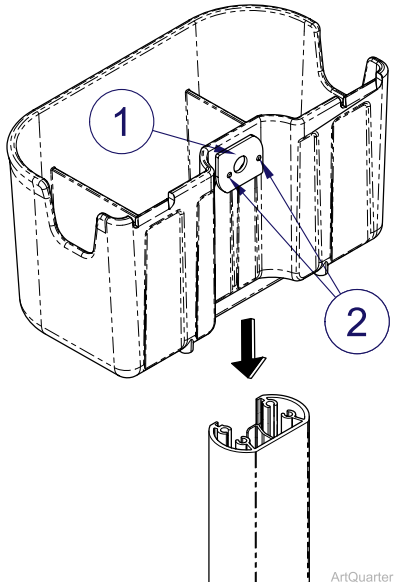

© 2026 Midmark Corp. | 60 Vista Drive Versailles, OH 45380 USA | 1.800.643.6275 | midmark.com

9260181 / **003-11042-00**
20-42-FO-00012 Rev A3 ECO101412

Setup

Step 9: Attach front bin onto rear bin.

Install front bin onto rear bin by aligning the two tabs at the top of the bins.

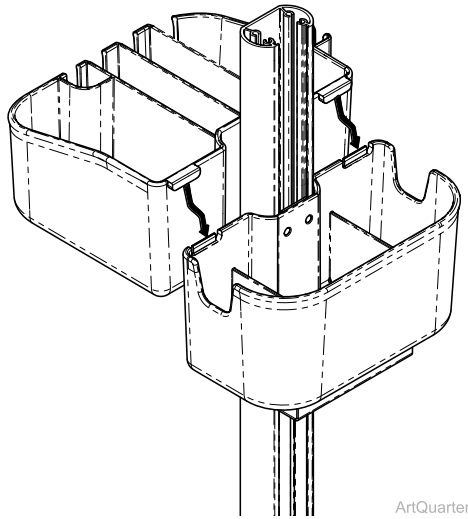

Step 10: Install the two M4 thread-forming screws on the underside of the bins.

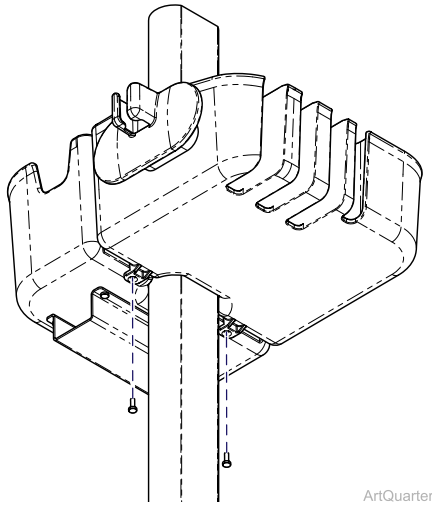

Step 11: Prepare the cart for the handle assembly.

Re-insert the previously removed top short cable protection sleeve. Bottom it out on the rear bin plate.

Before proceeding to the next step, there should be no gaps; the length of the column should be covered by mounted pieces or the cable protection sleeves.

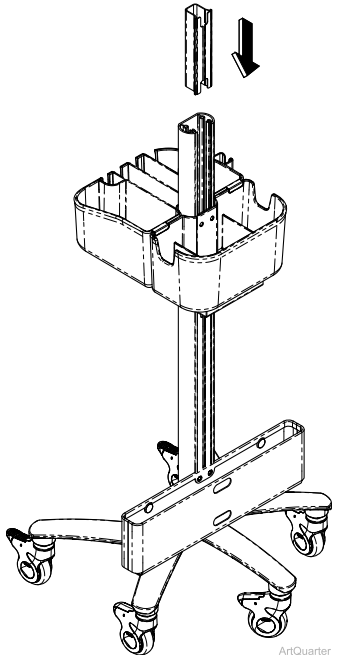

Step 12: Mount handle assembly to cart.

A) Insert handle assembly onto top of column. Ensure the handle grip is facing front as shown.

B) Use two M6 bolts to attach the handle to the cart via the two front-most threaded holes.

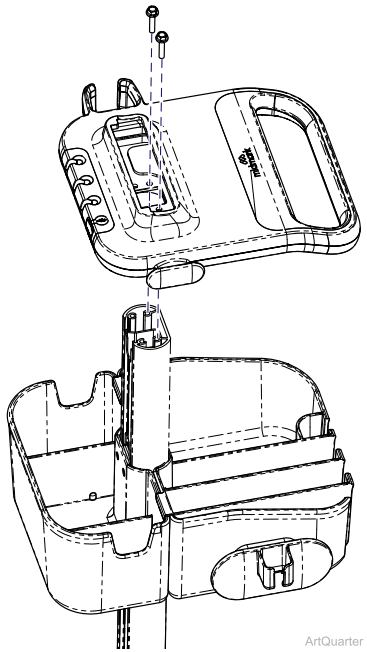

© 2026 Midmark Corp. | 60 Vista Drive Versailles, OH 45380 USA | 1.800.643.6275 | midmark.com

9260181 / **003-11042-00**
20-42-FO-00012 Rev A3 ECO101412

Setup

Step 13: Optional: Thread hook-and-loop fasteners through slots in device mount bracket as shown.

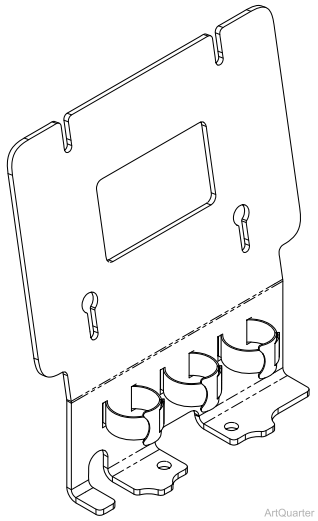

Step 14: Attach device mount bracket to top of the cart.

A) Lower device mount bracket into position, aligned with the back two threaded holes. The USB-C cable (arrow 1) embedded in the handle assembly must be positioned such that it routes through the gap in the bottom of the bracket (arrow 2) when the bracket is placed on top of it.

B) Fasten the bracket in place using two M6 bolts.

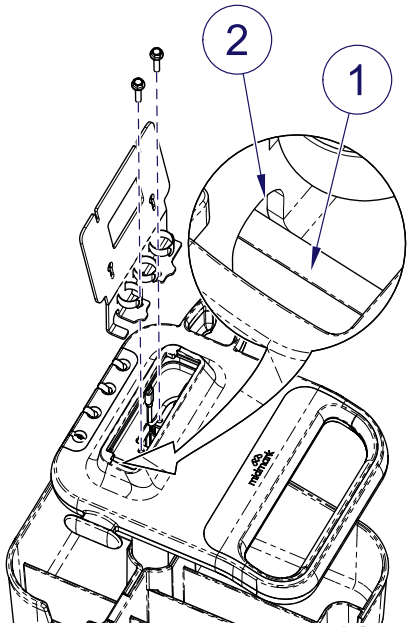

Step 15: Insert power supply into power supply holder (underside of rear bin) and tighten all four screws of the holder.

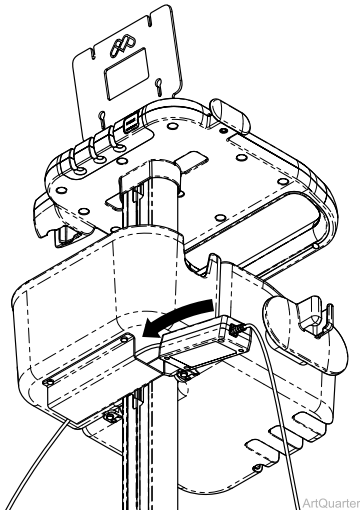

Step 16: Route power cord, USB-C cable, and any other applicable cables up through column.

Route cables/cords through the protection sleeves and up through column so that they emerge through the opening at the top of the column.

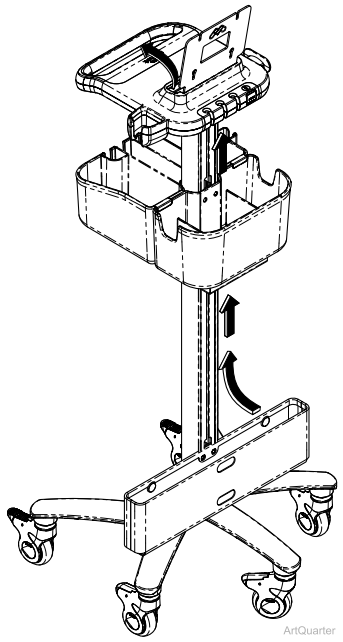

Step 17: Start four M4 screws in the back of the Midmark® 800 device.

Do not tighten all the way.

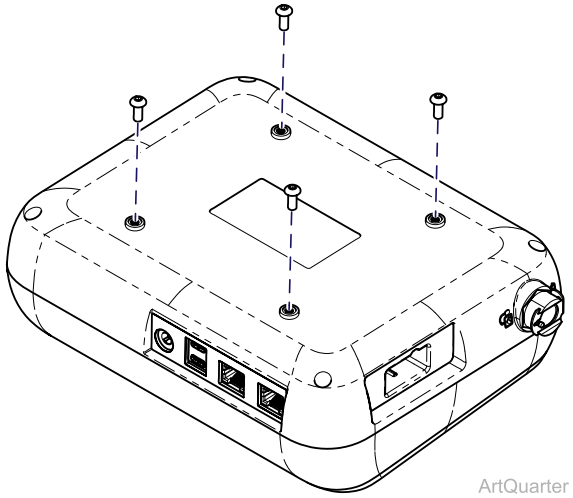

Step 18: Insert cables into the appropriate ports on the Midmark 800 device.

- Tip: It may be helpful to lay the Midmark 800 face-down on the handle assembly while performing this step.
- If the hook-and-loop fasteners were threaded through the mount bracket as previously instructed, secure the fasteners around the cables for strain relief. Recommended order from left to right as applicable: chair scale (RJ45) conector, temporal scanner connector, Detecto floor scale/USB-C connector and power cable.

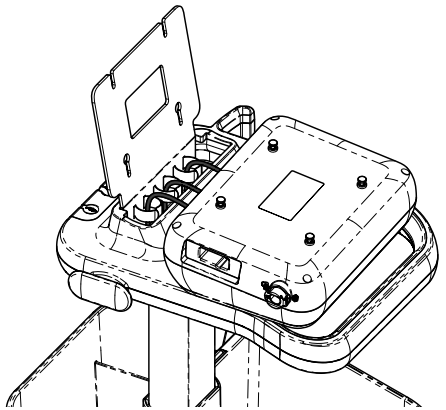

Step 19: Insert Midmark 800 device into the slots of the mounting bracket and tighten down screws.

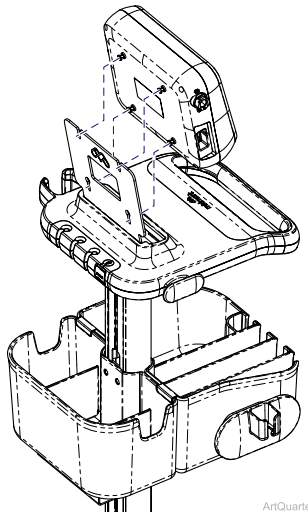

(Continued on next page)

© 2026 Midmark Corp. | 60 Vista Drive Versailles, OH 45380 USA | 1.800.643.6275 | midmark.com

9260181 / **003-11042-00**
20-42-FO-00012 Rev A3 ECO101412

Setup

Step 20: If not already in place, put accessories in designated storage spaces as applicable.

1 = Temporal Scanner Holder
2 = Blood Pressure Hose Hanger
3 = SpO_2 Reel and Holder
4 = Blood Pressure Cuff Slots
5 = Temporal Scanner Cap Cubby

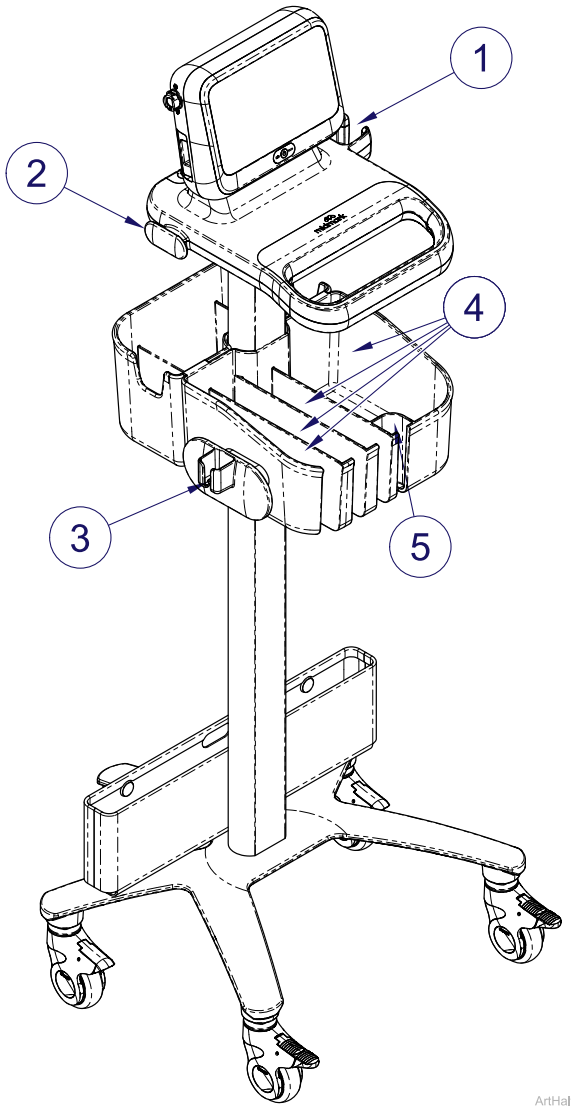

Step 21: If not already in place, put accessories in designated storage spaces as applicable.

1 = USB-C port for floor scale. (Also used for software updates.)
2 = (Optional) Slots for Cables Not in Use
3 = Cable Storage Bin
4 = Power Supply Holder
5 = Scale Holder

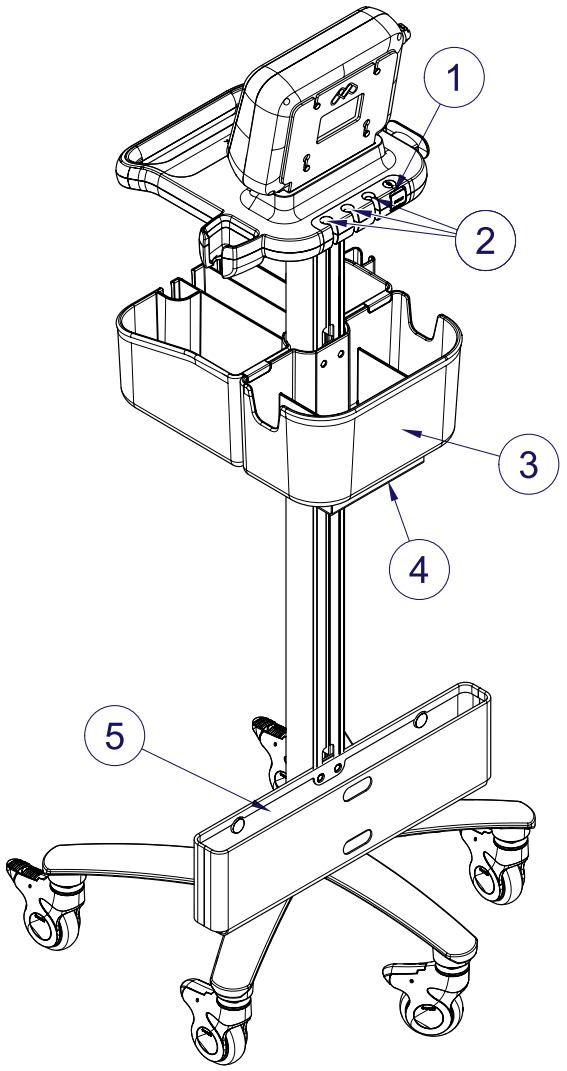

© 2026 Midmark Corp. | 60 Vista Drive Versailles, OH 45380 USA | 1.800.643.6275 | midmark.com

9260181 / **003-11042-00**
20-42-FO-00012 Rev A3 ECO101412