Midmark® 800 Digital Vital Signs Device: Connectivity Wiring Setup Guide

Applies to Models:
Chair: 626
Midmark 800: 1-300-0100 thru 1-300-0400

Special Tools:
none

Note
All wall plates and wiring connections within wall are provided by facility. In-wall facility wiring not in legend.

Connect the Midmark 800 to a 626 Chair (Kit #002-11689-00)

Follow the connections shown. Lettered callouts match the legend below.

WARNING
Connect only Midmark-approved exam chairs to the Midmark 800 Digital Vital Signs Device. Connection of this equipment results in a medical electrical system. Refer to the User Guide, 003-10718-00, for a full list of approved accessories and their corresponding ports. Other combinations of equipment have not been evaluated for safety.

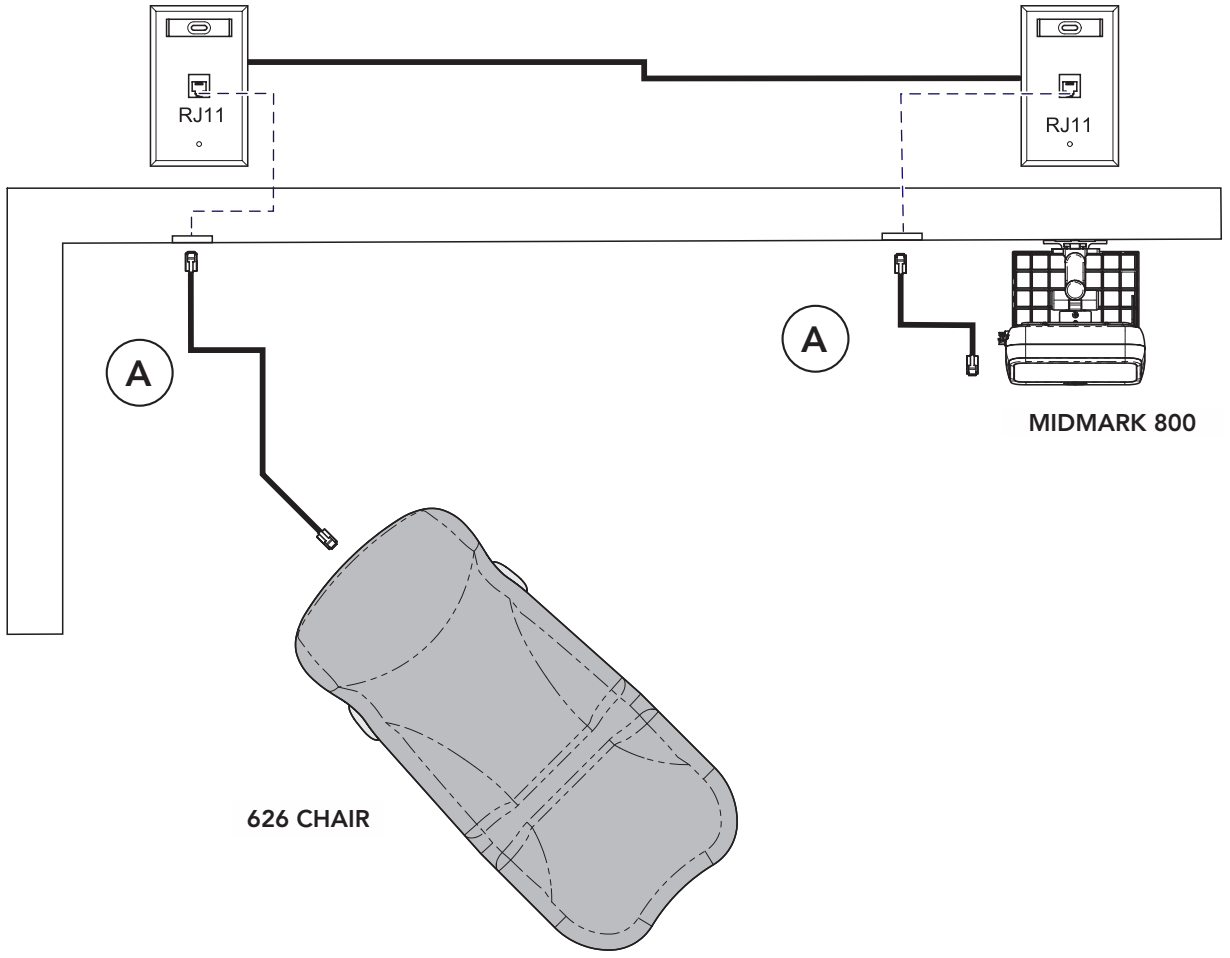

Legend	
Item	Description
A	RJ11 Serial Cable, Straight

ArtFull

Midmark® 800 Digital Vital Signs Device: Connectivity Wiring Setup Guide

Applies to Models:
Midmark 800: 1-300-0100 thru 1-300-0400

Special Tools:
none

Note
All wall plates and wiring connections within wall are provided by facility. In-wall facility wiring not in legend.

Connect the Midmark 800 to a Personal Computer (PC) (Kit #002-11673-00)

Follow the connections shown. Lettered callouts match the legend below.

Note
Connecting other equipment to the Midmark 800 Digital Vital Signs Device USB-C port may result in previously unidentified risks to patients, clinicians, etc. Subsequent changes such as adding, removing or updating equipment may result in new risks. It is the system integrator's responsibility to identify, analyze, evaluate and control such risks. Refer to IEC 80001-1:2010 for guidance. Only connect equipment certified to UL 60950-1, UL 62368-1 or ES 60601-1.

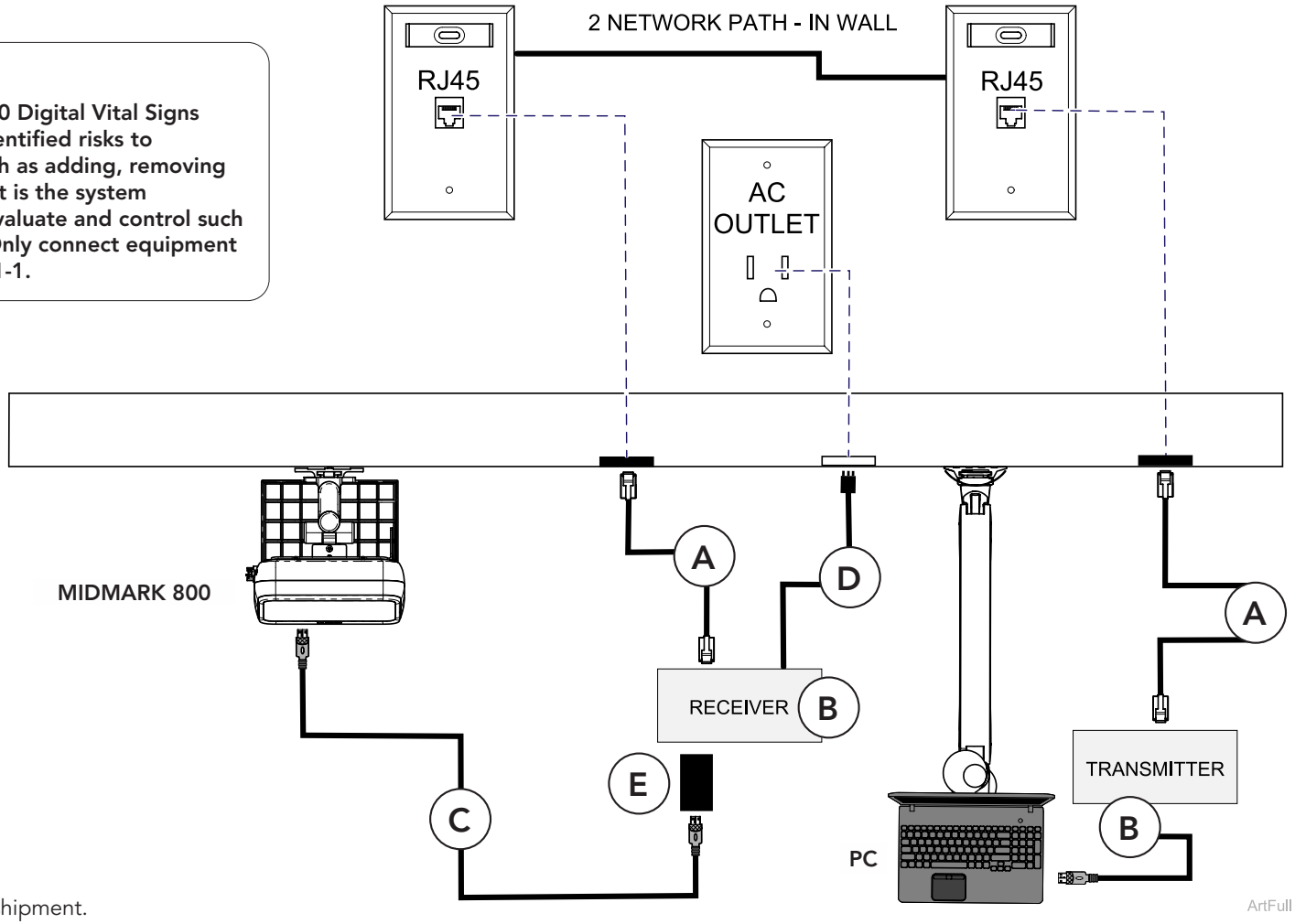

Legend	
Item	Description
A	Ethernet Cable
B	USB/Ethernet Extender Kit (receiver + transmitter)
C*	USB-C to USB-C Cable
D	Wall-Mount Power Supply
E	USB-C to USB-A Adapter

*This item included within the original Midmark 800 shipment. This item is not part of the 002-11673-00 kit.

© 2026 Midmark Corp. | 60 Vista Drive Versailles, OH 45380 USA | 1.800.643.6275 | midmark.com

003-11117-00
20-42-FO-00012 Rev A3 ECO101412