Specifications: UltraBase Fixed Gate Panel

These panels are available in several sizes. This specification includes dimensions and materials pertaining to standard gate sizes and materials. Panel types may vary.

Wire Fixed Frame Panel Shown

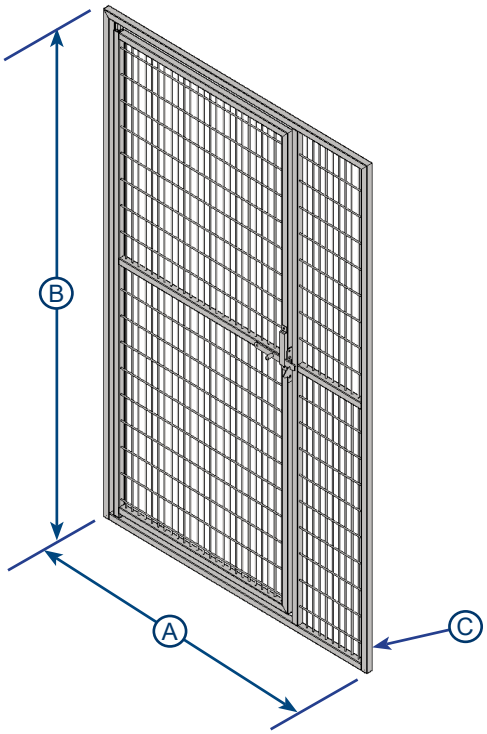

Specifications

Physical Dimensions	
Overall Width (A)	91.44 cm (36 in) 121.92 cm (48 in)
Overall Height (B)	181.31 cm (71.38 in)
Overall Length (C)	2.54 cm (1 in)
Wire Grid Vertical	0.48 cm (0.19 in) x 2.39 cm (0.94 in)
Wire Grid Horizontal	0.48 cm (0.19 in) x 9.22 cm (3.63 in)
Weight	
Weight	Configurations Vary
Materials	
Gate Frame	0.049" (18 GA) 304 A-554 Welded Stainless Steel*, 180 Grit Polish 6063-T52 Aluminum U-Channel, 0.75" x 0.75" x 0.13"
Panel Infill	304 Stainless Steel* Wire
	0.250" Tempered Glass with a Polyvinyl Chloride Extrusion Seal
	0.030" FRP (Fiberglass Reinforced Plastic) 0.400" HDPP Core
	0.028" HPL (High Pressure Laminate) 0.400" HDPP Core
Gate Latch	Stainless Steel

** Series 304 is referred to as medical grade due to its composition.*

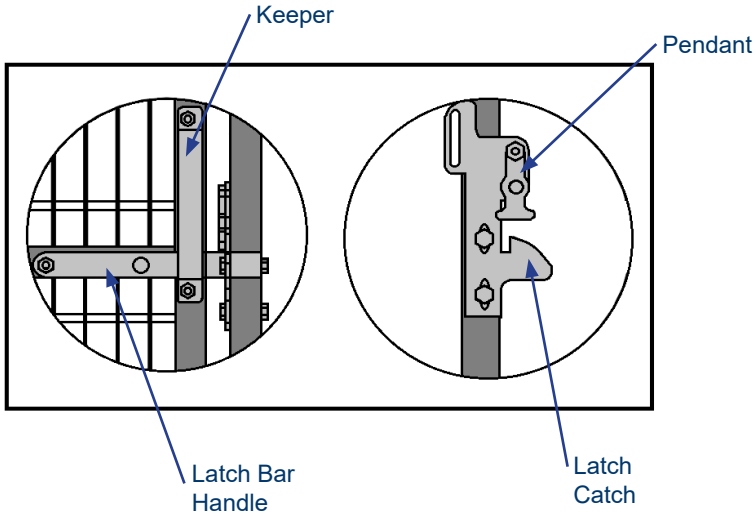

SS GATE LATCH

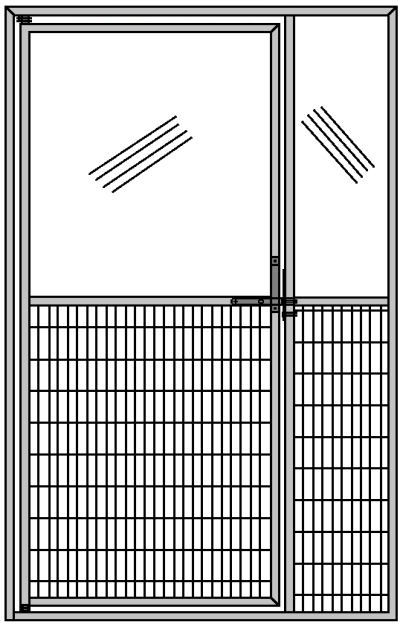

GLASS OVER WIRE FIXED GATE

NOTE: Panel infill material varies.

⚠ This product can expose you to chemicals, including nickel (metallic), which are known to the state of California to cause cancer. For more information, go to: www.P65Warnings.ca.gov